SYM	DESCRIPTION OF REVISION	DATE	REVISED	APPROVED

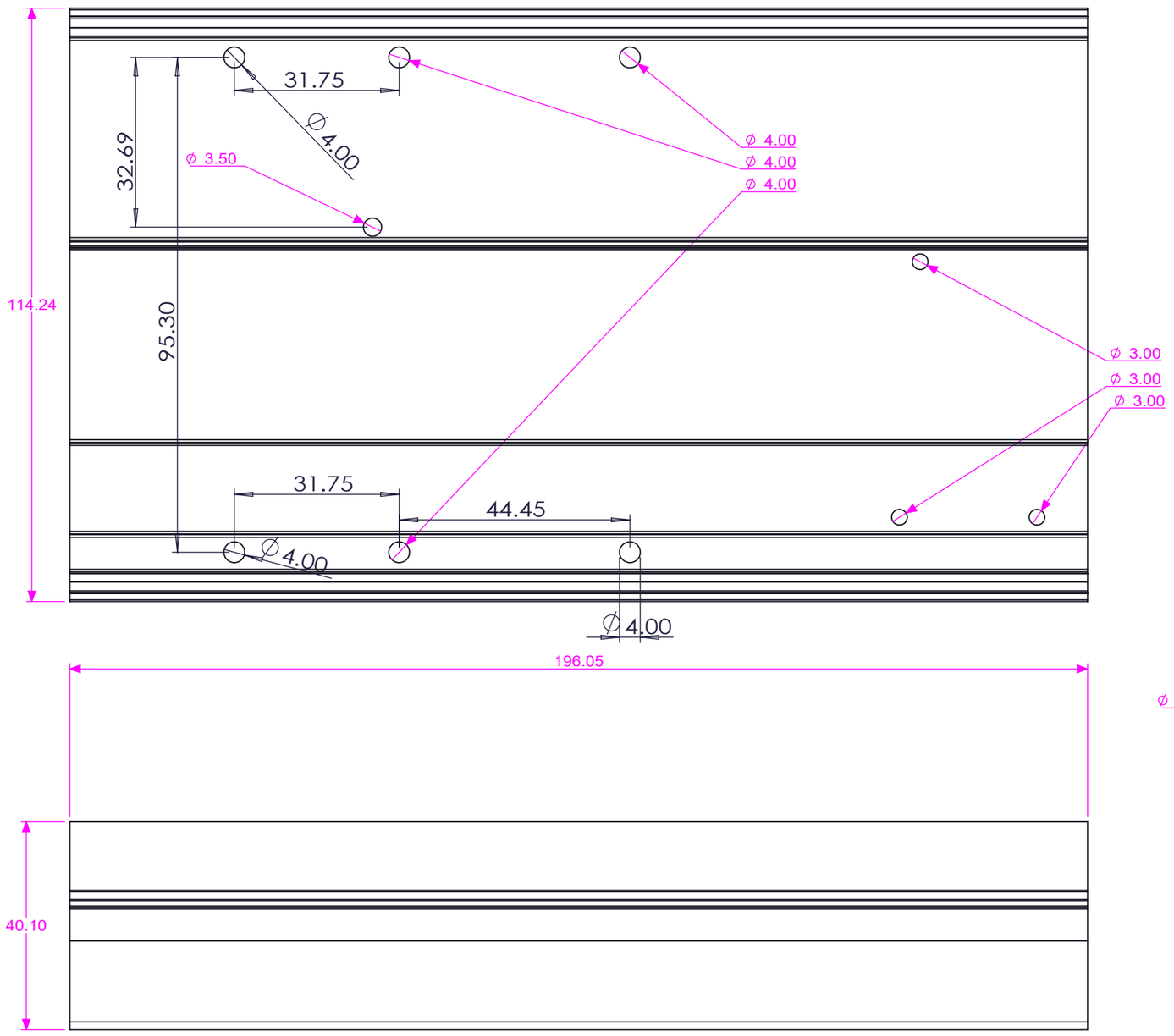

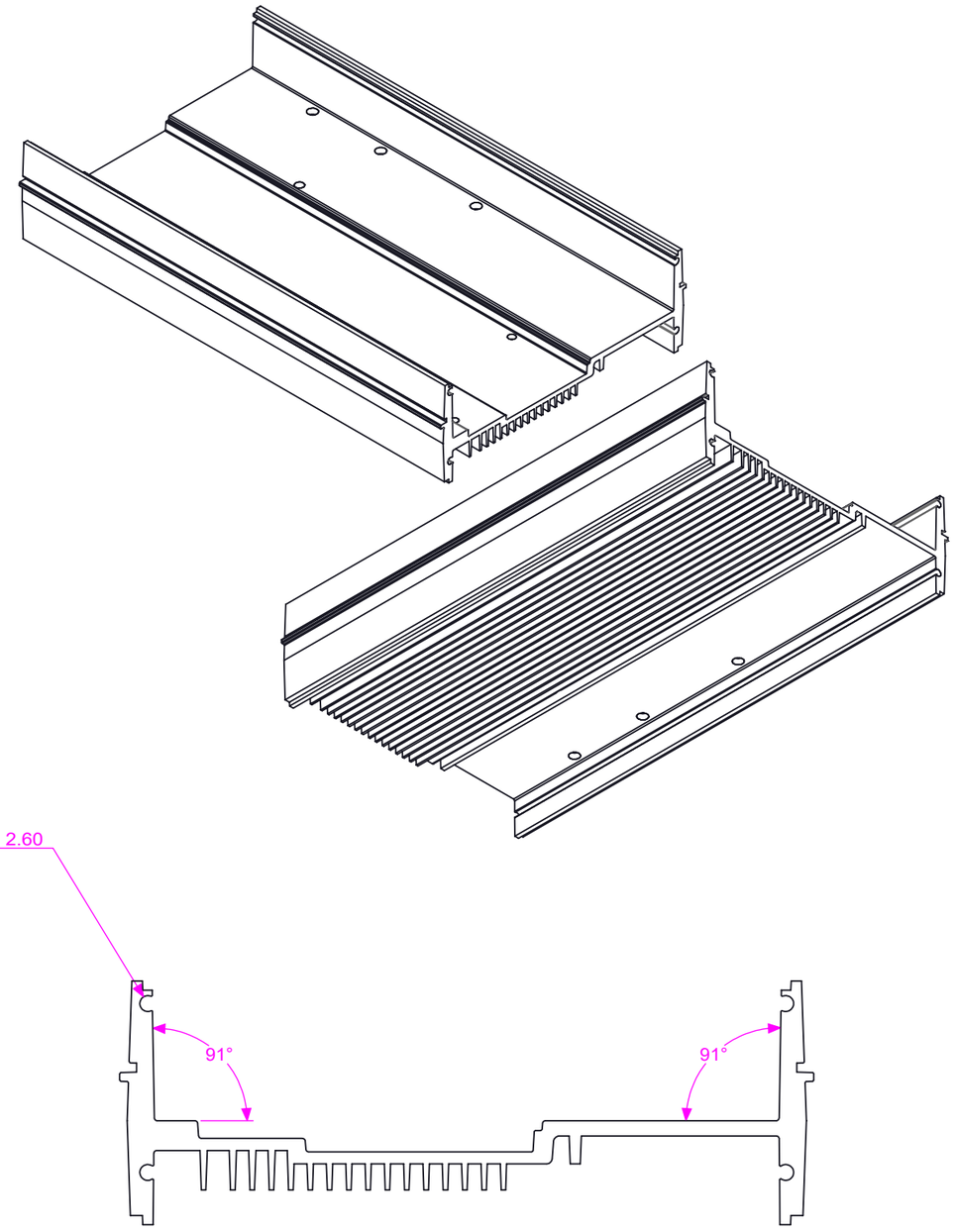

NO.	PART NO.	Description & Specification	Q'TY	MATERIAL	FINISHED	REMARK
1						

TOLERANCES	1	2	3
0~4	±0.05	±0.1	±0.2
4~16	±0.08	±0.15	±0.3
16~64	±0.12	±0.25	±0.4
64~250	±0.25	±0.4	±0.6
250~	±0.35	±0.6	±0.8

SCALE 1/1	UNIT mm	APPROVED	
		CHECKED	
3RD ANG PRJ		DESIGNED	S.S.Kim
ANG	FORMAT A3	PROJECTION	

PART NAME.	
DWG No.	
PROJECT.	
SHEETS	1/1

A3(420*297)

All rights reserved