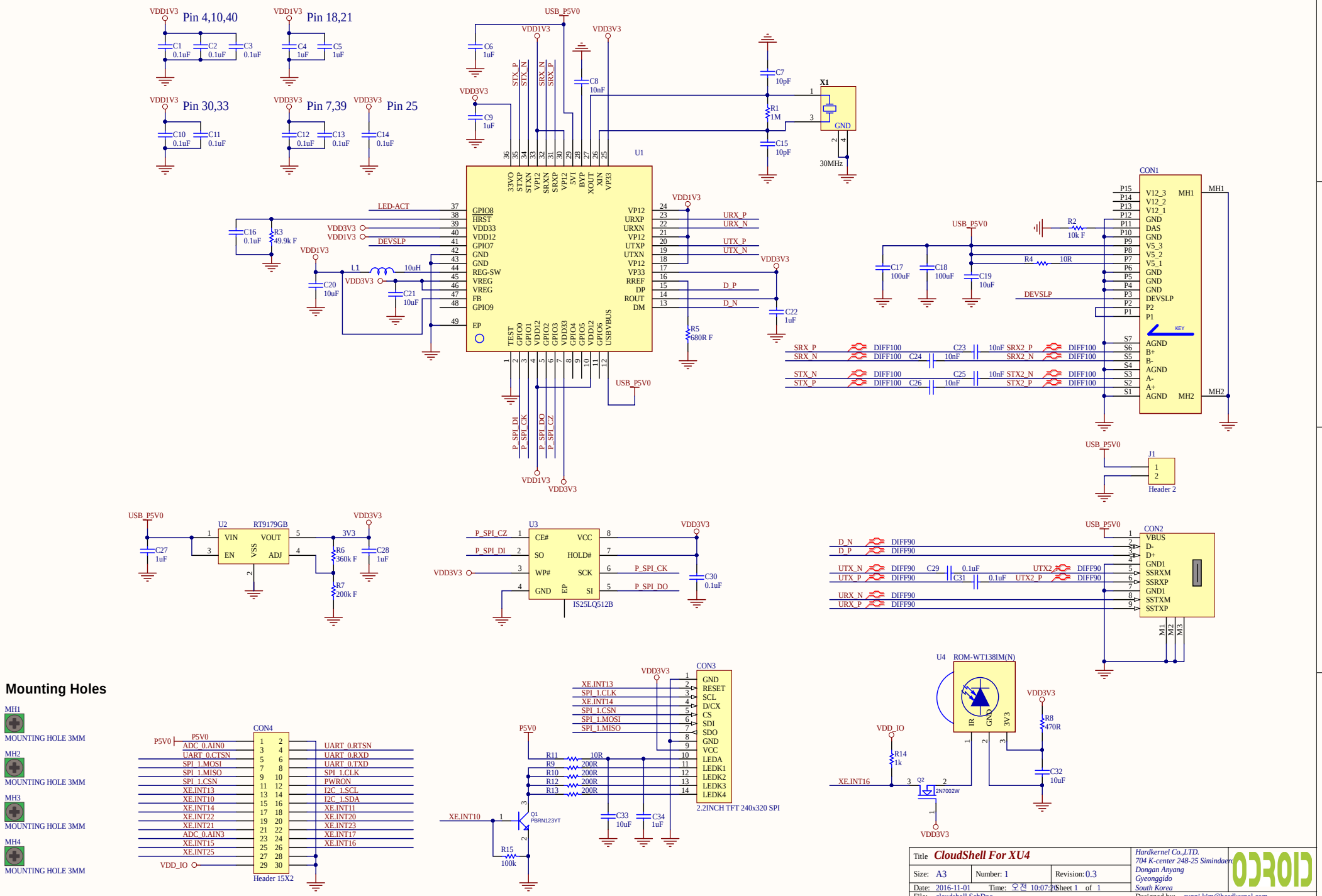
Pin 4,10,40
Pin 18,21
Pin 30,33
Pin 7,39
Pin 25
U1
U2 RT9179GB
U3 IS25LQ512B
CON1
CON2
CON3 2.2INCH TFT 240x320 SPI
CON4 Header 15X2
J1 Header 2
X1 30MHz
U4 ROM-WT138IM(N)
Mounting Holes
MH1 MOUNTING HOLE 3MM
MH2 MOUNTING HOLE 3MM
MH3 MOUNTING HOLE 3MM
MH4 MOUNTING HOLE 3MM
Title CloudShell For XU4
Size: A3
Number: 1
Revision: 0.3
Date: 2016-11-01
Time: 오전 10:07:26
Sheet 1 of 1
File: cloudshell.SchDoc
Hardkernel Co.,LTD.
704 K-center 248-25 Simindaero
Dongan Anyang
Gyeonggido
South Korea
Designed by: ruppi kim@hardkernel.com