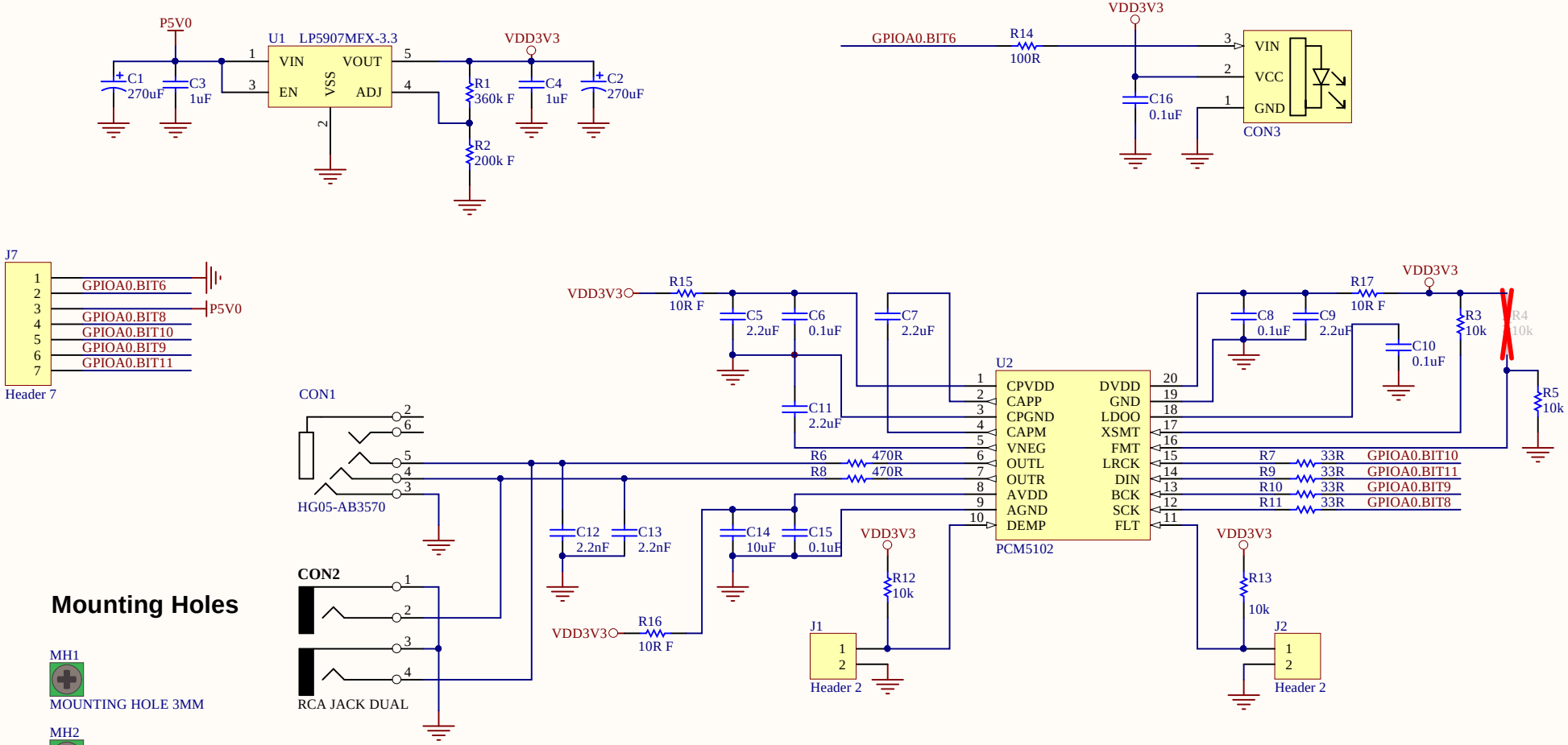

Mounting Holes

MH1
MOUNTING HOLE 3MM

MH2
MOUNTING HOLE 3MM

MH3
MOUNTING HOLE 3MM

MH4
MOUNTING HOLE 3MM

Title	*HiFi Shield*		*Hardkernel Co.,LTD.* *475-1 Mananro* *Manangu, Anyang City* *Gyeonggido* *South Korea*
Size: A4	Number:1	Revision:0.3	
Date: 2016-05-19	Time: 오후 4:41:46	Sheet 1 of 1	
File: HiFi_Shield.SchDoc			Designed by: ruppi kim@hardkernel.com