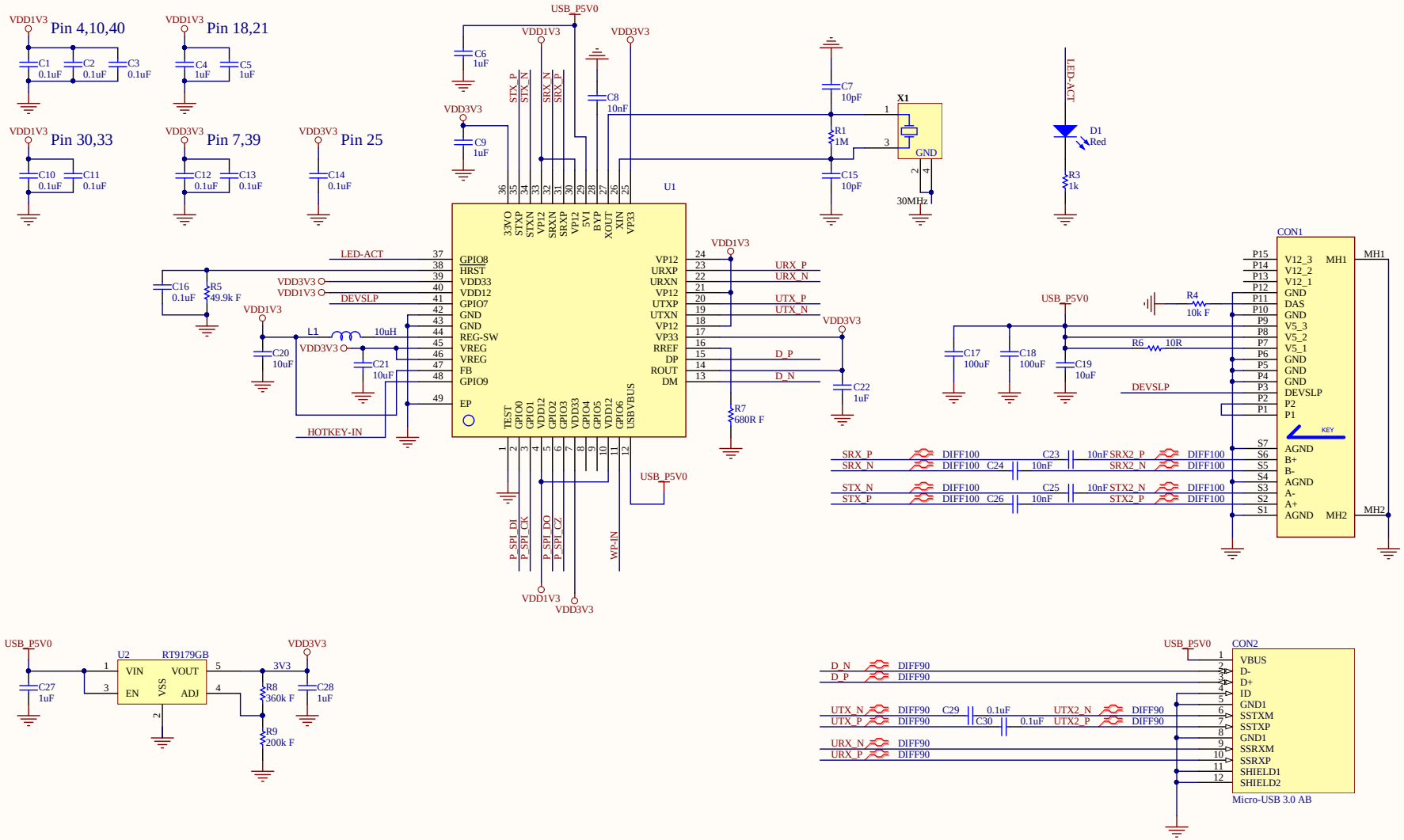

Mounting Holes

MH1

MOUNTING HOLE 3MM

MH2

MOUNTING HOLE 3MM

Title	*USB3.0 to SATA BRIDGE*		*Hardkernel Co.,LTD.* *704 K-center 248-25 Simindae* *Dongan Anyang* *Gyeonggido* *South Korea*
Size: A3	Number: 1	Revision: 0.3	
Date: 2016-01-11	Time: 오후 5:06:06	Sheet 1 of 1	
File: USB3.0 to SATA BRIDGE.SchDoc			Designed by: ruppi kim@hardkernel.com